QuikTune® 3000 Micro-Adjustable Installation & Setup

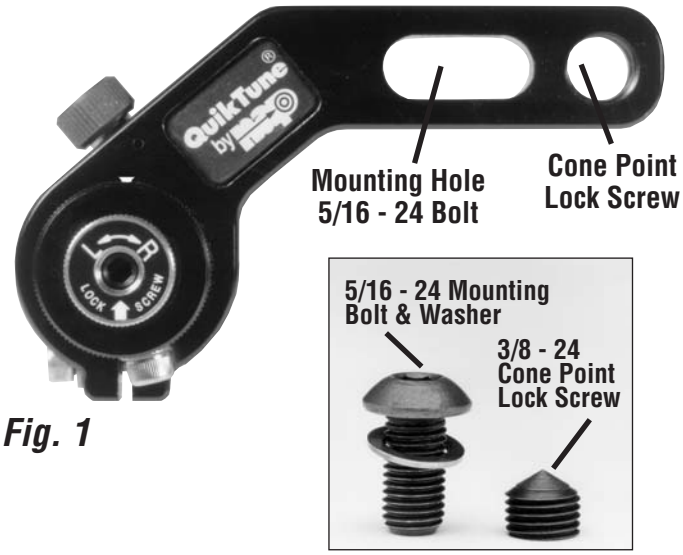

Fig. 1

Fig. 2

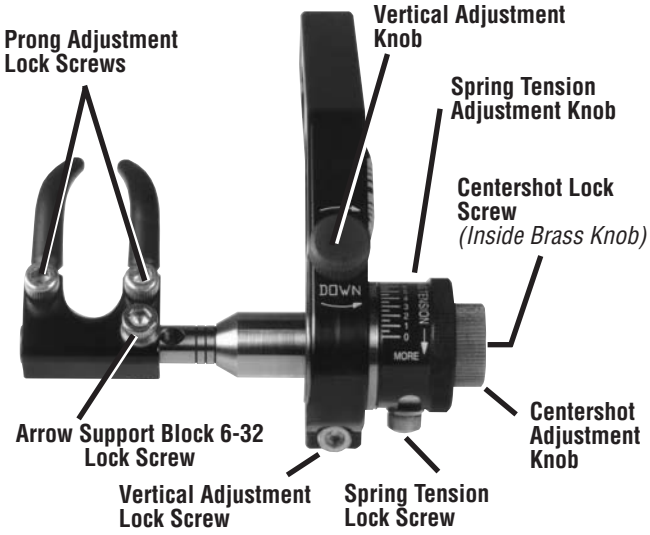

Fig. 3

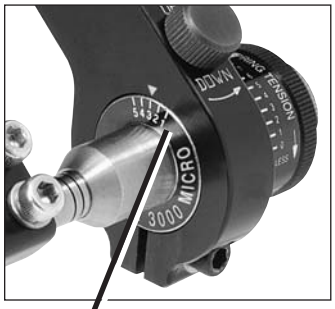

Fig. 4

1. MOUNTING THE REST: (Figure 1) Mount the rest on the bow riser using the 5/16 - 24 bolt provided. Position the rest so that the top edge of the bracket is square to the bowstring. Tighten the cone point lock screw about 1/4 turn past snug.

2. SETTING THE PRONG GAP: (Figure 2) Using the 7/64 hex wrench loosen the prong adjustment lock screws that hold the prongs in place. Adjust the prongs so that 2/3 of the arrow sits above the prongs. Place a nock set on the string so that the arrow is positioned square to the string. The arrow should be centered and parallel to the mounting hole shown in Figure 1.

3. ADJUSTING VERTICAL POSITION: (Figure 2) Loosen the vertical adjustment lock screw, then turn the vertical adjustment knob to raise or lower the prongs. The goal is to position the arrow perpendicular to the bowstring. Retighten the vertical adjustment lock screw. The position marker (Figure 3) on the inside face of the rest provides a reference for prong height.

4. ADJUSTING SPRING TENSION: (Figure 2) To properly set the rest tension for each specific arrow weight, nock the arrow and place it on the prongs. Loosen the spring tension lock screw at the bottom of the black tension knob. Turn the tension knob toward the number “0” to loosen the spring tension until the arrow depresses the prongs. Slowly increase the spring tension by turning the knob toward the number “10” until the prongs raise the arrow back to the horizontal position. Retighten the spring tension lock screw.

5. ADJUSTING CENTERSHOT: (Figure 4) Loosen the centershot adjustment lock screw (inside brass knob) until it is flush with the end of the centershot adjustment knob. Turn the centershot adjustment knob to position the arrow support right or left. Retighten the centershot adjustment lock screw. Use the “paper tuning” method to find proper centershot. Position markers on the pivot shaft provide a quick reference of how far in or out the rest has been adjusted. NOTE: Some bows have unusually thick or thin risers. If additional outward or inward centershot is needed, the arrowrest support assembly may be repositioned in or out. Remove the 6-32 lock screw (Figure 2) with the 7/64 hex wrench. Reposition the arrowrest support block to either the inner or outer tapped hole as required. Replace and tighten the 6-32 lock screw. Adjust centershot as needed.

Converting the QUIKTUNE® 3000 *Micro-Adjustable* Arrowrest to use the 3D Launcher

1. Using the 7/64 hex wrench loosen and remove the lock screws that hold the prongs in place.
2. Remove the prongs and save for future use.
3. Place the 3D launcher on top of the rest block, replace the lock screws and then tighten the screws slightly more than snugly.

Silencer Replacement - Replacement QuikTune Silencers found at your favorite archery retailer.